BELIMO
BELIMO Automation Ltd
Brunnenbachstrasse 1
8340 Hinwil
SWITZERLAND

www.belimo.com/safety

R3..-BL..

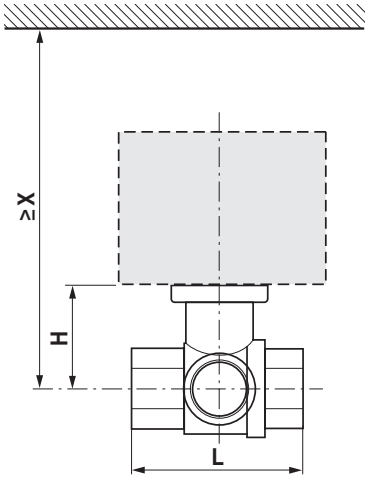

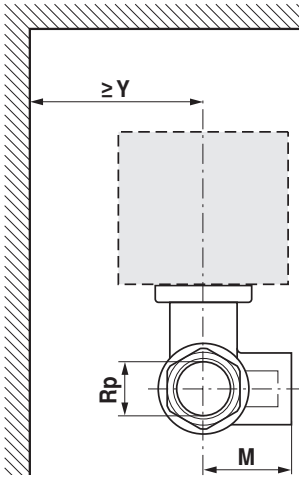

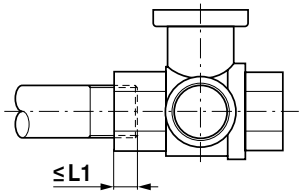

71992-00001.A

CE

t	–10 ... +100°C
p_s	1600 kPa

	DN	Rp	mm				100°C															
							TR..		LR..A		NR..A		SR..A		TRF..		LRF..		NRF..A		SRF..A	
	mm	”	L	H	M	L1	X	Y	X	Y	X	Y	X	Y	X	Y	X	Y	X	Y	X	Y
R3015-BL1	15	1/2”	67	44	36	13	185	75	195	75	230	80	230	80	190	80	200	90	220	90	220	90
R3020-BL2	20	3/4”	78	46	41.5	14			200	75	235	80	235	80			205	90	225	90	225	90
R3025-BL2	25	1“	87	46	45	16			200	75	235	80	235	80			205	90	225	90	225	90
R3032-BL2	32	1 1/4“	105	46	55.5	19			200	75	240	80	240	80					230	90	230	90
R3032-BL3	32	1 1/4“	105	50.5	55.5	19					240	80	240	80					230	90	230	90
R3040-BL3	40	1 1/2“	111	50.5	56	19					240	80	240	80					230	90	230	90
R3040-BL4	40	1 1/2“	122	62	66.5	19							250	80							240	90
R3050-BL3	50	2“	125	56	68	22					245	80	245	80					235	90	235	90
R3050-BL4	50	2“	142	68	79	22							262	80							252	90

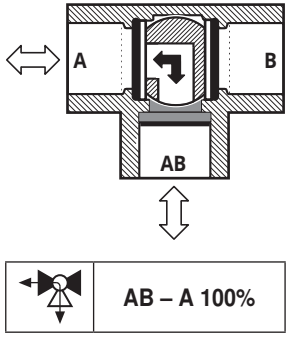

AB – A 100%

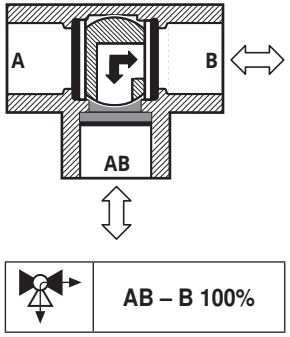

AB – B 100%

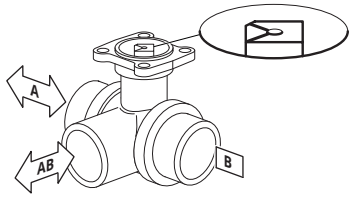

AB – A 100%

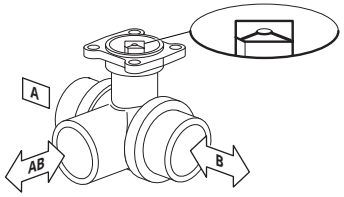

AB – A 0%

AB – B 0%
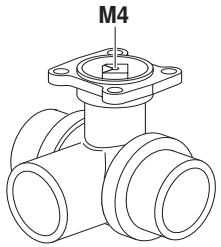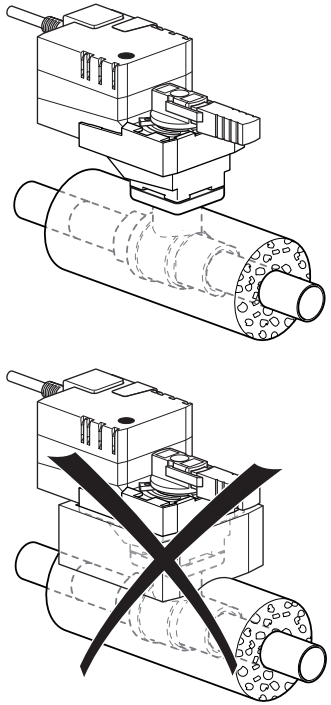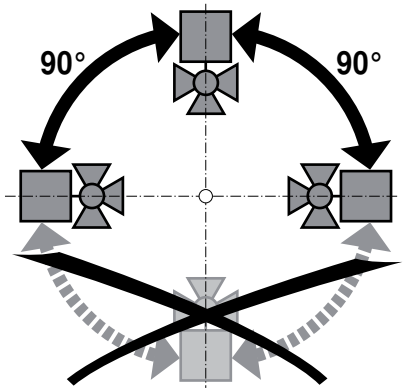
AB – B 100%